U.S. COAST GUARD

ANT PHILADELPHIA
PHILADELPHIA, PENNSYLVANIA

REBUILD KINKORA RANGE REAR LIGHT

NAVIGATIONAL AID STRUCTURE

DRAWING INDEX

SHT	DISC	
1	G-01	VICINITY MAP/CHART EXCERPT
2	G-02	SURVEY/LAYOUT/DEMOLITION
3	C-01	TOWER ELEVATIONS/PLAN
4	C-02	FOUNDATION PLAN/DET./SEC.
5	S-01	ASSEMBLY ELEV./DET./SEC.
6	S-02	PLATFORM PLAN/SEC./DET.
7	S-03	TOWER DETAILS/SECTIONS
8	S-04	MISC. TOWER DETAILS
9	E-01	LIGHTNING PROTECTION PLAN
10	E-02	ELECTRICAL SCHEMATIC

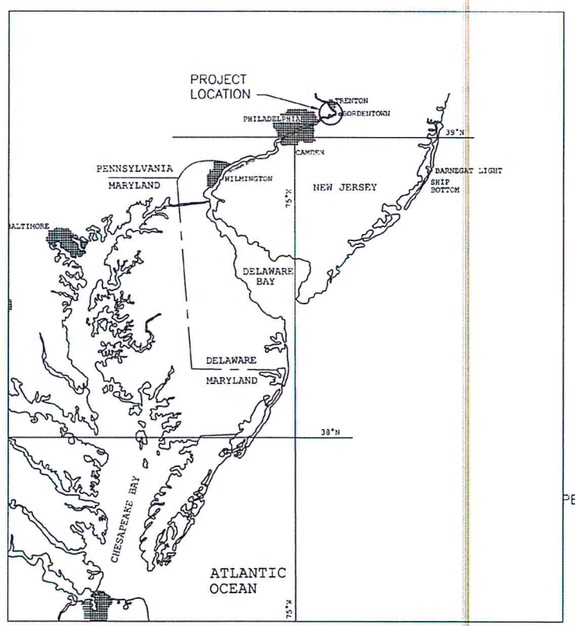

VICINITY MAP
NOT TO SCALE

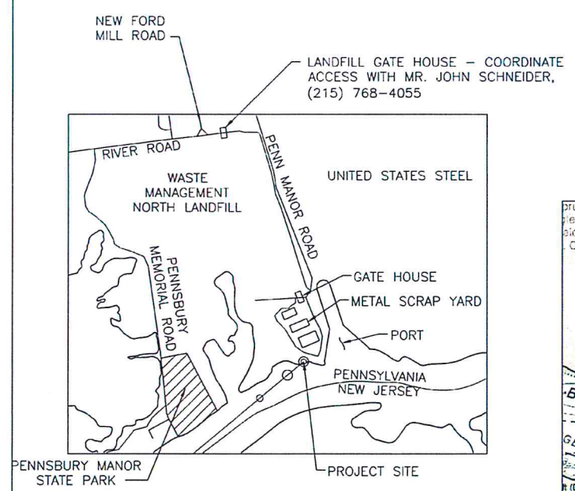

SITE MAP
SCALE: 1"=2000'

RANGE LINE COORDINATES EXPRESSED IN NAD83, NJ-2900, U.S. SURVEY FEET

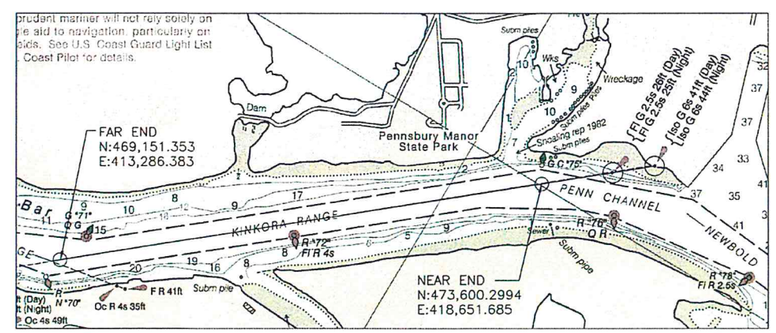

NOAA CHART 12278 EXCERPT
SCALE: 1"=1000'

USCG CEU
CLEVELAND, OHIO
(216) 902-6200

CONSULTANTS

U. S. COAST GUARD
CIVIL ENGINEERING UNIT
CLEVELAND

USCG. CEU CLEVELAND
1240 EAST 9TH STREET
CLEVELAND, OH 44199-2060

ISSUE		
MARK	DATE	DESCRIPTION

A/E PROJECT NO:
CAD FILE NAME: C8505G01
DESIGNED BY: DGW
DRAWN BY: BW
EDITED BY:
CHECKED BY:
SCALE: AS SHOWN PLOT SCALE: 1:1

SHEET TITLE
REBUILD KINKORA UPPER RR LT
CG ANT PHILADELPHIA
LEVITTOWN PA
LLNR 4150
GENERAL
VICINITY MAP/CHART EXCERPT

REVIEWED BY: D.G. WARD	REVIEWED BY: B.VRANKAR	REVIEWED BY: G.S. PLACZEK
PROJECT ENG.	BRANCH CHIEF	TECH. DIRECTOR
J.M. HALL, CDR.		15-OCT-18
APPROVING OFFICER		DATE

PROJECT NUMBER	DRAWING NUMBER
6784815	8505-D
DISCIPLINE/SHT NO	SHEET 1 OF 10
G-01	

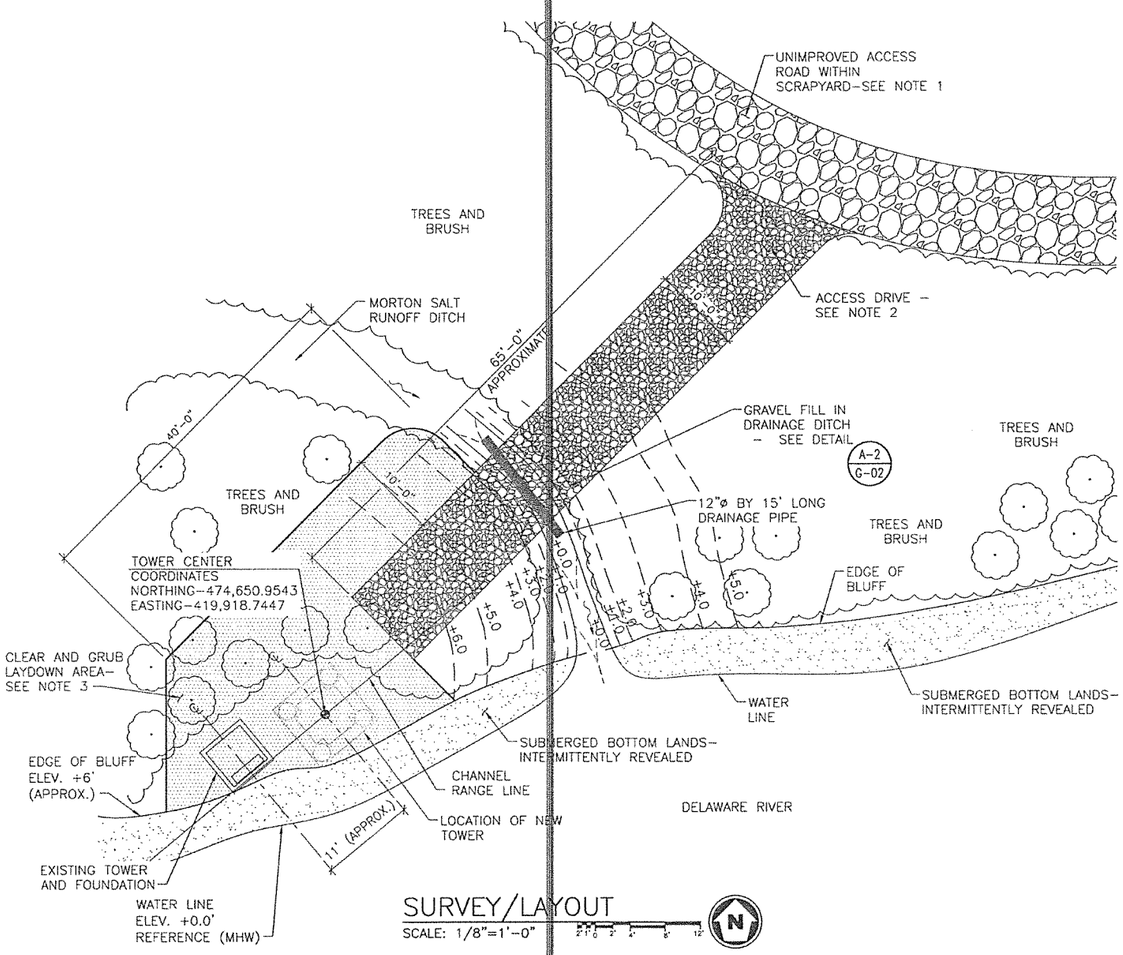

SURVEY/LAYOUT

SCALE: 1/8"=1'-0"

NOTES:

1. THE ACCESS ROAD IS ACCESSIBLE FROM RIVER ROAD WITH WITH A SECURITY GATE HOUSE AT THE ENTRANCE. THE DRIVE IS VERY UNEVEN AND INACCESSIBLE DURING WET CONDITIONS. USE OF ALL WHEEL DRIVE VEHICLES WITH HIGH GROUND CLEARANCE IS REQUIRED. THE DRIVE SHALL REMAIN ACCESSIBLE AT ALL TIMES FOR SCRAP-YARD OPERATIONS. COORDINATE ACCESS TO THE SITE WITH MR. JOHN SCHNEIDER AT (215) 768-4055 OR E-MAIL JSCHNEID2@WM.COM.
2. CONSTRUCT GRAVEL ACCESS DRIVE TO THE TOWER SITE. CONSTRUCT THE TO THE APPROXIMATE DIMENSIONS INDICATED FOR EQUIPMENT ACCESS.
3. CLEAR/REMOVE BRUSH AND SMALL TREES AS REQUIRED TO ACCESS THE SITE AND PLACE GRAVEL AS NECESSARY FOR MATERIAL LAY-DOWN AND OPERATION OF EQUIPMENT.
4. REMOVE AND SALVAGE EQUIPMENT INDICATED AND DELIVER TO ANT PHILADELPHIA. COORDINATE WITH ANT PHILADELPHIA AT (215) 271-4962.
5. CUT AND REMOVE THE TOWER IN ITS ENTIRETY. THE TOWER IS FABRICATED OF SCHEDULE 80 STEEL PIPE AND SHALL BE RECYCLED. CUT ANCHOR BOLTS FLUSH WITH TOP OF CONCRETE. THE FOUNDATION SHALL REMAIN.

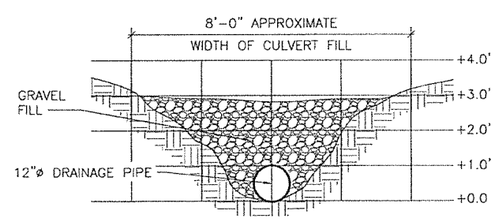

CULVERT DETAIL A-2

SCALE: 1/2"=1'-0"

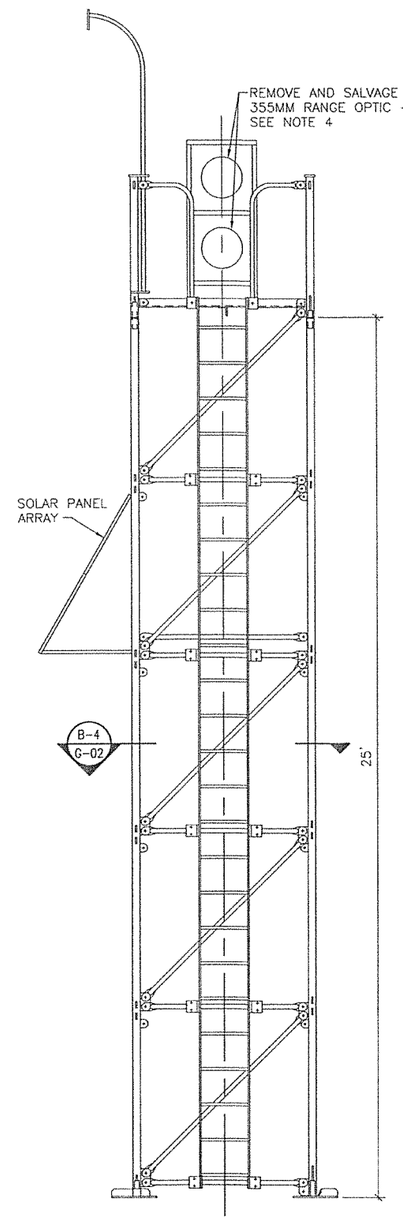

DEMOLITION ELEVATION

SCALE: 1/2"=1'-0"

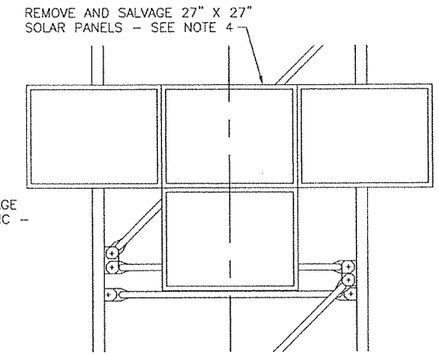

SOLAR PANEL REMOVAL ELEVATION

SCALE: 3/4"=1'-0"

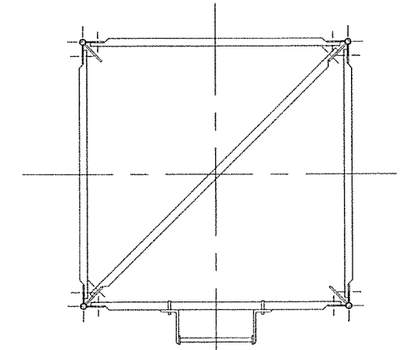

SECTION B-4

SCALE: 3/4"=1'-0"

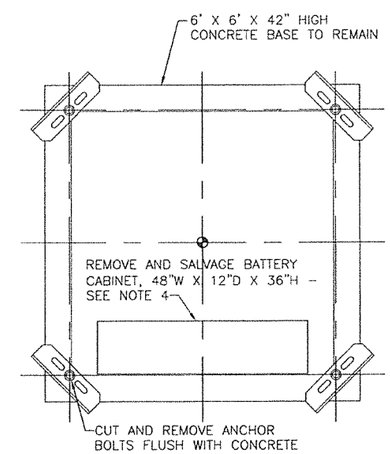

DEMOLITION PLAN

SCALE: 3/4"=1'-0"

USCG CEU
CLEVELAND, OHIO
(216) 902-6200

CONSULTANTS

U. S. COAST GUARD
CIVIL ENGINEERING UNIT
CLEVELAND

USCG. CEU CLEVELAND
1240 EAST 9TH STREET
CLEVELAND, OH 44199-2060

ISSUE		
MARK	DATE	DESCRIPTION

A/E PROJECT NO:	
CAD FILE NAME:	CB505G02
DESIGNED BY:	DGW
DRAWN BY:	BW
EDITED BY:	
CHECKED BY:	
SCALE: AS SHOWN	PLOT SCALE: 1:1

SHEET TITLE

REBUILD KINKORA UPPER RR LT
CG ANT PHILADELPHIA
LEVITTOWN PA
LLNR 4150
GENERAL
SURVEY/LAYOUT/DEMOLITION

REVIEWED BY: D.G. WARD	REVIEWED BY: B.VRANKAR	REVIEWED BY: G.S. PLAGEK
PROJECT ENG.	BRANCH CHIEF	TECH. DIRECTOR
J.M. HALL, CDR.		15-OCT-18
APPROVING OFFICER		DATE

PROJECT NUMBER	DRAWING NUMBER
6784815	8505-D
DISCIPLINE/SHT NO	
G-02	SHEET 2 OF 10

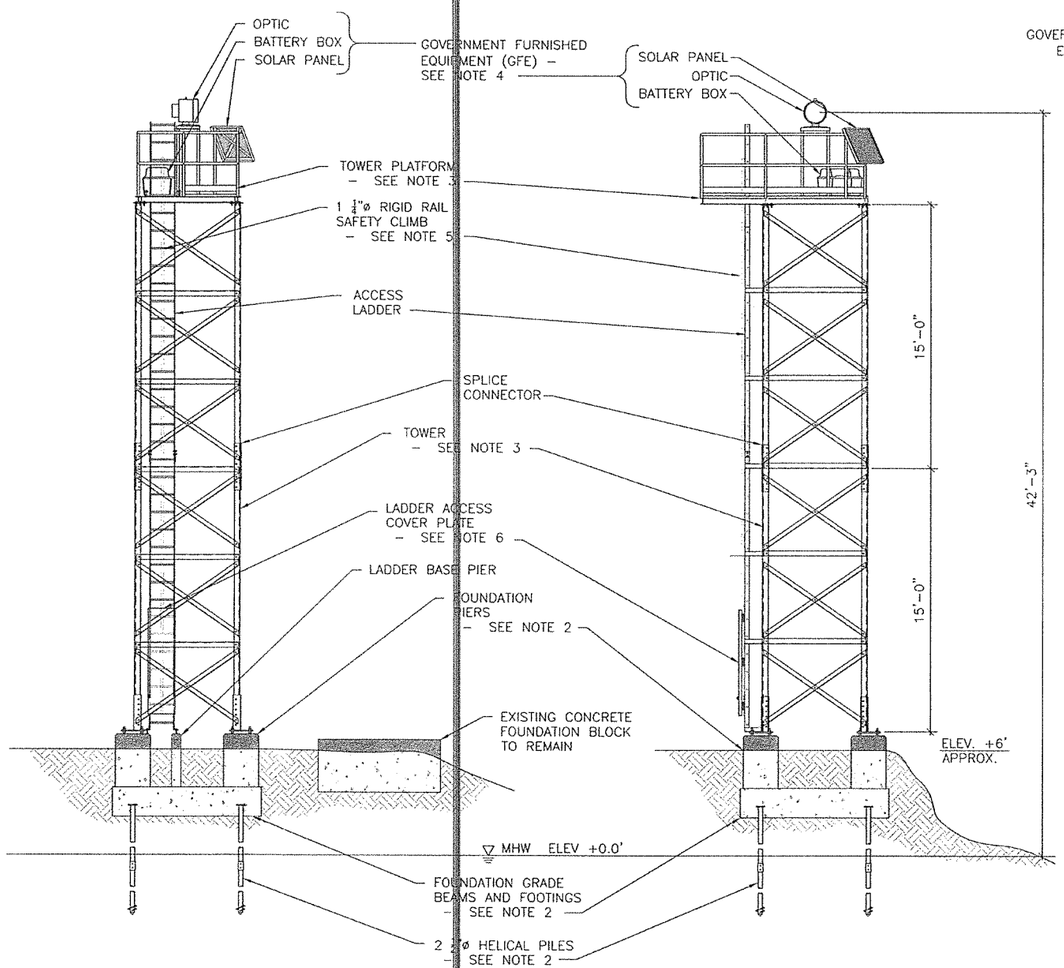

LEFT ELEVATION A–1

SCALE: 1/4"=1'-0"

FRONT ELEVATION A–2

SCALE: 1/4"=1'-0"

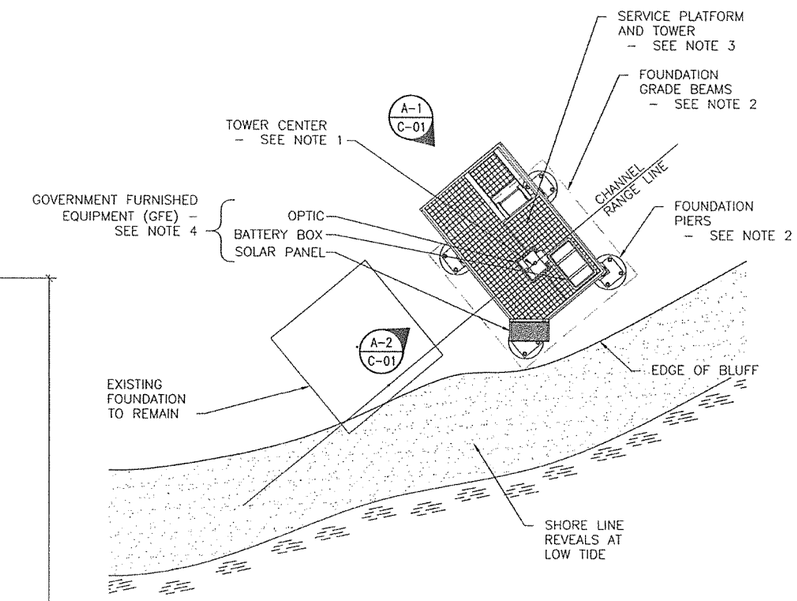

TOWER LAYOUT

SCALE: 1/4"=1'-0"

NOTES:

1. SURVEY AND POSITION THE NEW LIGHT TOWER AT THE COORDINATES SHOWN ON SHEET G–02. ASSURE THE TOWER IS POSITIONED ON THE CHANNEL RANGE CENTERLINE.
2. DRILL AND INSTALL HELICAL PILES CENTERED ON THE FOUNDATION PIERS AT THE TOWER LEG LOCATIONS. PLACE REBAR AND CONSTRUCT GRADE BEAMS TO FORM THE BASE OF THE FOUNDATION. FORM AND INSTALL FOUNDATION PIERS WITH REBAR AND ANCHOR BOLTS. REFER TO SHEET C–02 FOR CONSTRUCTION DETAILS OF THE FOUNDATION.
3. FABRICATE THE TOWER AND PLATFORM AS SHOWN ON SHEETS S–01 THROUGH S–04 AND ASSEMBLE AND INSTALL ON THE NEW FOUNDATION.
4. GOVERNMENT FURNISHED EQUIPMENT (GFE) SHALL BE OBTAINED FROM ANT PHILADELPHIA AT 1 WASHIINGTON AVE, PHILADELPHIA, PA. POC IS MK1 CAMPOS AT (215) 271–4962. GFE SHALL BE SET AND INSTALLED ON THE TOP OF THE TOWER. ALL WIRING AND CONNECTIONS WILL BE COMPLETED BY COAST GUARD PERSONNEL.
5. RIGID RAIL SAFETY CLIMB SHALL BE FABRICATED OF 1 1/4" DIAMETER SCHEDULE 40 PIPE, GALVANIZED. SAFETY CLIMB SHALL BE ATTACHED TO THE LADDER AS RECOMMENDED BY THE MANUFACTURER. THE SAFETY CLIMB SHALL EXTEND FROM THE BOTTOM OF THE LADDER TO 18 INCHES BELOW THE TOP OF THE LADDER.
6. FABRICATE AND INSTALL LADDER ACCESS COVER PLATE TO LIMIT ACCESS TO THE LOWER TOWER LADDER SECTION. COVER PLATE SHALL BE FABRICATED AS SHOWN ON SHEET S–03.

USCG CEU
CLEVELAND, OHIO
(216) 902–6200

CONSULTANTS

U. S. COAST GUARD
CIVIL ENGINEERING UNIT
CLEVELAND

USCG. CEU CLEVELAND
1240 EAST 9TH STREET
CLEVELAND, OH 44199–2060

ISSUE		
MARK	DATE	DESCRIPTION

A/E PROJECT NO:	
CAD FILE NAME:	C8505C01
DESIGNED BY:	DGW
DRAWN BY:	DGW
EDITED BY:	
CHECKED BY:	
SCALE: AS SHOWN	PLOT SCALE:

SHEET TITLE

REBUILD KINKORA UPPER RR LT
CG ANT PHILADELPHIA
LEVITTOWN PA
LLNR 4150
CIVIL
TOWER ELEVATIONS/PLAN

REVIEWED BY: D.G.WARD	REVIEWED BY: B. VRANKAR	REVIEWED BY: G.S. PLASZEK
PROJECT ENG.	BRANCH CHIEF	TECH. DIRECTOR
J.M. HALL, CDR.		15–OCT–18
APPROVING OFFICER		DATE

PROJECT NUMBER	DRAWING NUMBER
6784815	8505–D
DISCIPLINE/SHT NO	
C–01	SHEET 3 OF 10

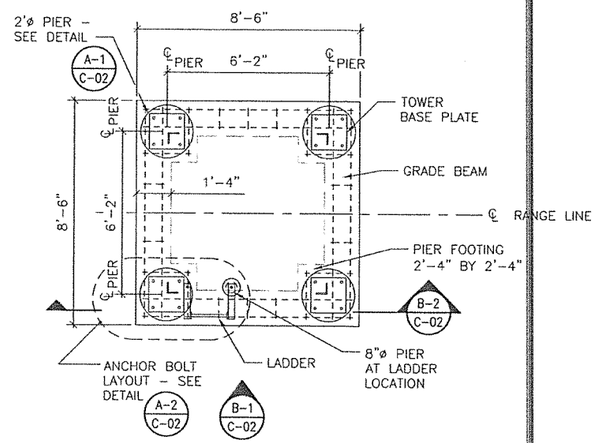

FOUNDATION PLAN C–1

SCALE: 1/2"=1'-0"

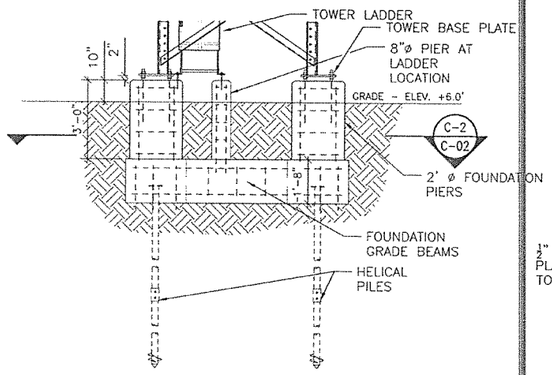

FOUNDATION ELEVATION B–1

SCALE: 1/2"=1'-0"

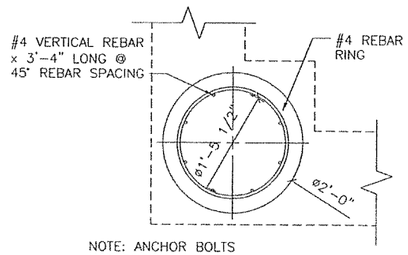

PEIR DETAIL A–1

SCALE: 1"=1'-0"

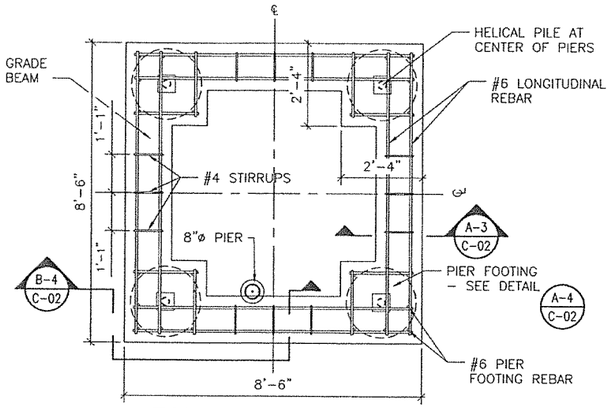

FOUNDATION SECTION C–2

SCALE: 1/2"=1'-0"

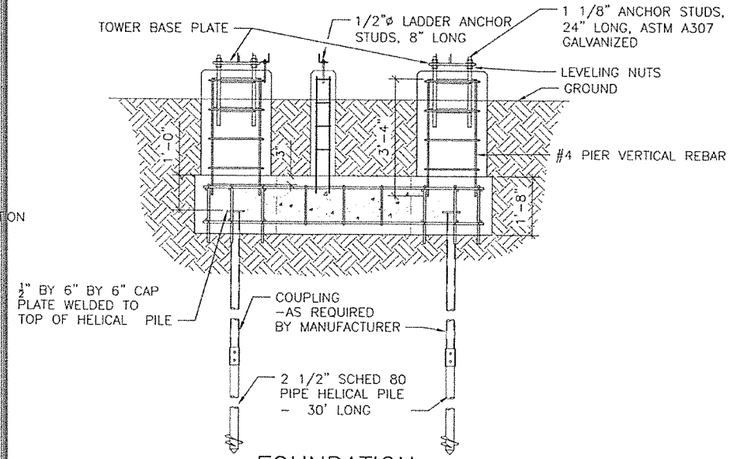

FOUNDATION SECTION B–2

SCALE: 1/2"=1'-0"

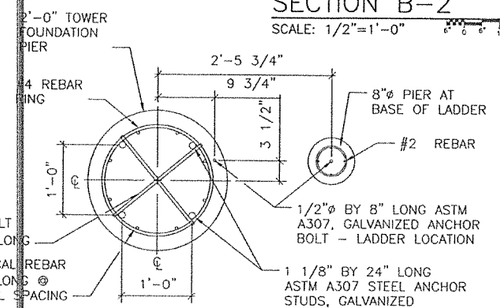

ANCHOR BOLT LAYOUT DETAIL A–2

SCALE: 1"=1'-0"

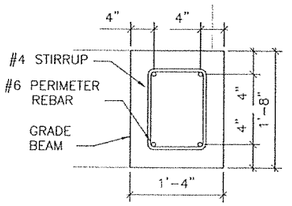

GRADE BEAM SECTION A–3

SCALE: 1"=1'-0"

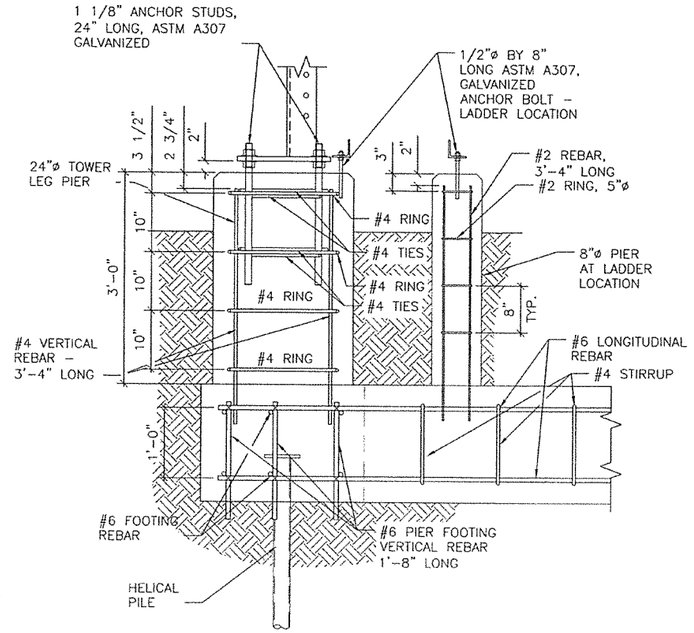

SECTION B–4

SCALE: 1"=1'-0"

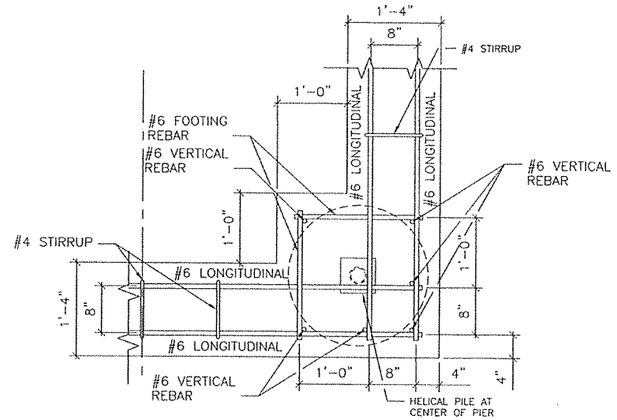

DETAIL A–4

SCALE: 1"=1'-0"

NOTES

1. REBAR SHALL BE ASTM A615 STEEL WITH EPOXY COATING CONFORMING WITH ASTM A934.
2. CONCRETE SHALL HAVE 4,000 PSI COMPRESSIVE STRENGTH.

USCG CEU
CLEVELAND, OHIO
(216) 902-6200

CONSULTANTS

U. S. COAST GUARD
CIVIL ENGINEERING UNIT
CLEVELAND

USCG. CEU CLEVELAND
1240 EAST 9TH STREET
CLEVELAND, OH 44199-2060

ISSUE		
MARK	DATE	DESCRIPTION

A/E PROJECT NO:
CAD FILE NAME: C8505C03
DESIGNED BY: DGW
DRAWN BY: BW
EDITED BY:
CHECKED BY:

SCALE: AS SHOWN PLOT SCALE: 1:1

SHEET TITLE

REBUILD KINKORA UPPER RR LT
CG ANT PHILADELPHIA
LEVITTOWN PA
LLNR 4150
CIVIL
FOUNDATION PLAN/DET./SEC.

REVIEWED BY: D.G. WARD	REVIEWED BY: B.VRANKAR	REVIEWED BY: G.S. PLAUZEK
PROJECT ENG.	BRANCH CHIEF	TECH. DIRECTOR
J.M. HALL, CDR. APPROVING OFFICER		15-OCT-18 DATE

PROJECT NUMBER	DRAWING NUMBER
6846157	8505-D
DISCIPLINE/SHT NO C-02	SHEET 4 OF 10

ASSEMBLY BOLT SCHEDULE

DESCRIPTON	DIAMETER	LENGTH	QUANTITY
BASE/SPLICE CONNECTION	3/4"	3"	104
HB/CB/LEG CONNECTION	3/4"	2 1/2"	104
HB/HB/CB THRU CONNECTION	3/4"	2 1/2"	20
CB/DB INNER CONNECTION	3/4"	2"	29
LADDER SPLICE	1/2"	2"	4
LADDER STANDOFF	1/2"	1 1/2"	12
PLATFORM CONNECTOIN	5/8"	2 1/2"	16
ACCESS HATCH PINS	1/2"	2"	2

TOWER/LADDER ANCHOR STUDS

DESCRIPTON	DIAMETER	LENGTH	QUANTITY
TOWER ANCHOR STUD	1 1/8"	24"	16
LADDER ANCHOR BASE STUD	1/2"	8"	2

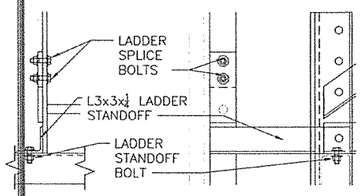

LADDER SPLICE DETAIL C-2
SCALE: 1 1/2"=1'-0"

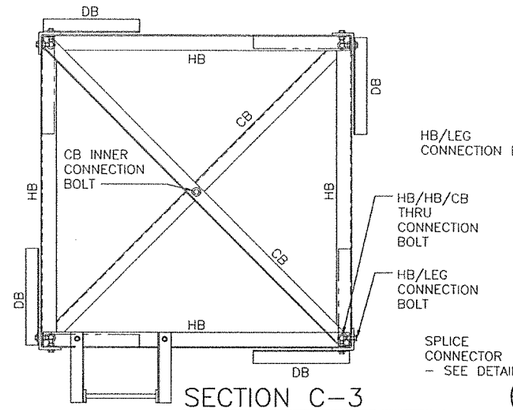

SECTION C-3
SCALE: 3/4"=1'-0"

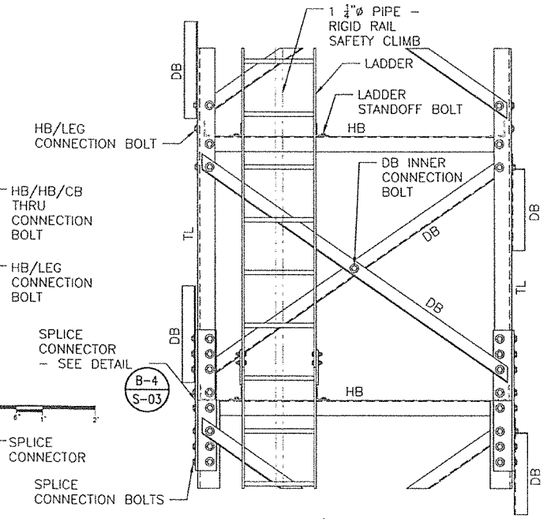

DETAIL/VIEW C-4
SCALE: 3/4"=1'-0"

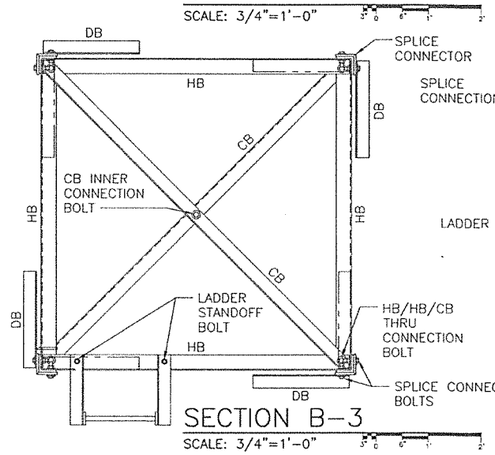

SECTION B-3
SCALE: 3/4"=1'-0"

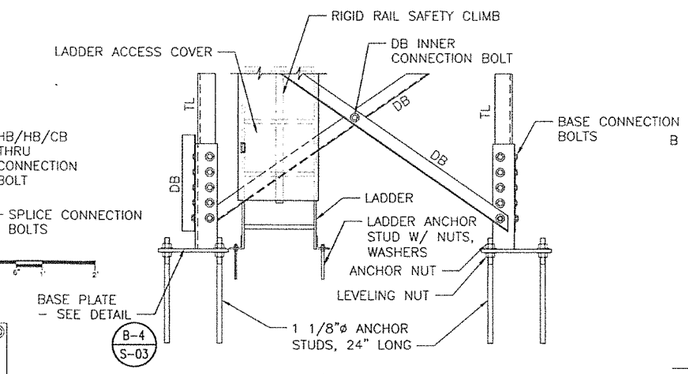

DETAIL/VIEW B-4
SCALE: 3/4"=1'-0"

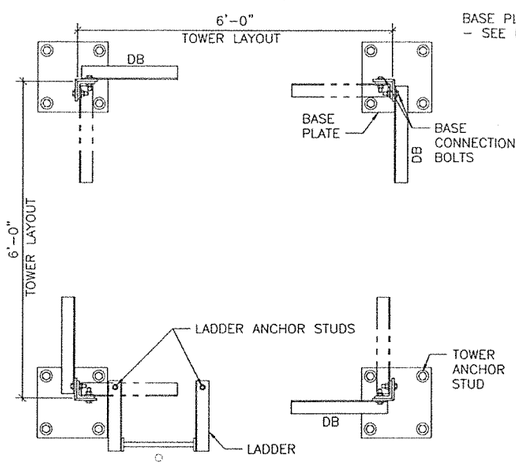

SECTION A-3
SCALE: 3/4"=1'-0"

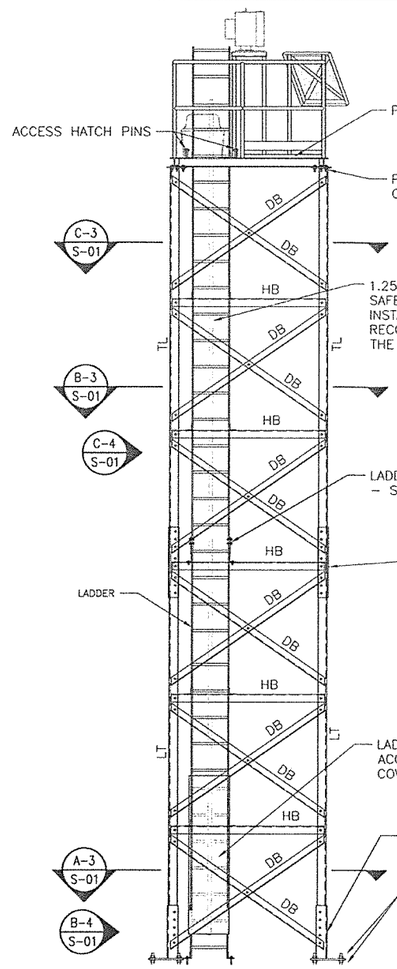

LEFT ELEVATION A-1
SCALE: 3/8"=1'-0"

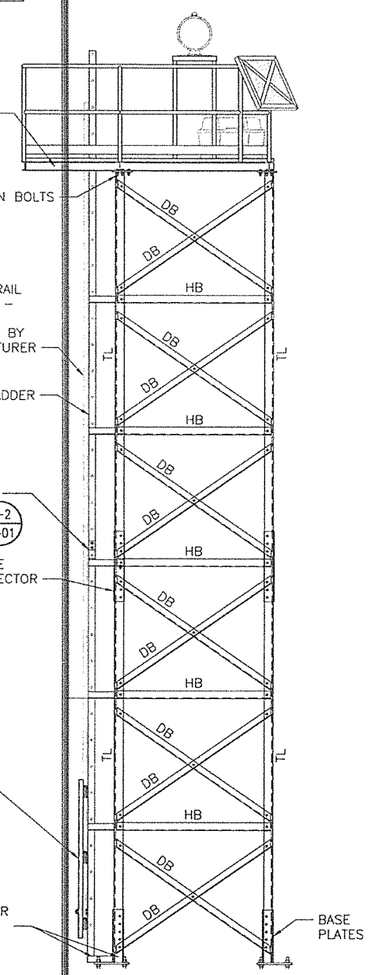

FRONT ELEVATION A-2
SCALE: 3/8"=1'-0"

NOTES:

1. ALL BOLTS AND STUDS SHALL BE 18-8 STAINLESS STEEL. NUTS AND WASHERS SHALL BE PROVIDED AS NECESSARY FOR FASTENING TOWER COMPONENTS.
2. ANCHOR STUDS SHALL BE ASTM A307 STEEL GALVANIZED IN ACCORDANCE WITH ASTM A 153. ANCHOR STUDS SHALL HAVE 4" LONG THREADED ENDS.
3. ALL BOLTED CONNECTIONS SHALL HAVE WASHERS ON EACH SIDE OF THE CONNECTION.
4. TOWER AND LADDER ANCHOR STUDS SHALL HAVE NUTS ABOVE AND BELOW THE BASE PLATES AND LADDER STANDOFFS. THE LOWER NUTS SHALL BE USED TO LEVEL THE TOWER AND LADDER.

KEY
HB – HORIZONTAL BRACE L3½ X 3½ X ¼
DB – DIAGONAL BRACE L3 X 3 X ¼
CB – CENTER BRACE L3 X 3 X ¼
TL – TOWER LEG L4 X 4 X ½

USCG CEU
CLEVELAND, OHIO
(216) 902-6200

CONSULTANTS

U. S. COAST GUARD
CIVIL ENGINEERING UNIT
CLEVELAND

USCG. CEU CLEVELAND
1240 EAST 9TH STREET
CLEVELAND, OH 44199-2060

ISSUE		
MARK	DATE	DESCRIPTION

A/E PROJECT NO:	
CAD FILE NAME:	C8505S01
DESIGNED BY:	DGW
DRAWN BY:	DGW
EDITED BY:	
CHECKED BY:	
SCALE: AS SHOWN	PLOT SCALE:

SHEET TITLE

REBUILD KINKORA UPPER RR LT
CG ANT PHILADELPHIA
LEVITTOWN PA
LLNR 4150
STRUCTURAL
ASSEMBLY ELEV./DET./SEC.

REVIEWED BY:	REVIEWED BY:	REVIEWED BY:
D.G.WARD	B. VRANKAR	G.S. PLACZEK
PROJECT ENG.	BRANCH CHIEF	TECH. DIRECTOR
J.M. HALL, CDR.		15-OCT-18
APPROVING OFFICER		DATE

PROJECT NUMBER	DRAWING NUMBER
6846157	8505-D
DISCIPLINE/SHT NO	
S-01	SHEET 5 OF 10

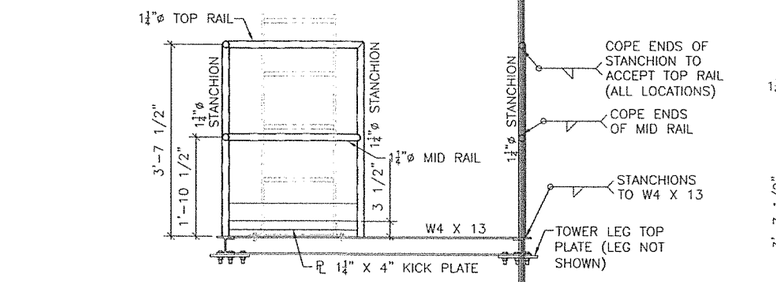

ELEVATION/VIEW C-1

SCALE: 3/4"=1'-0"

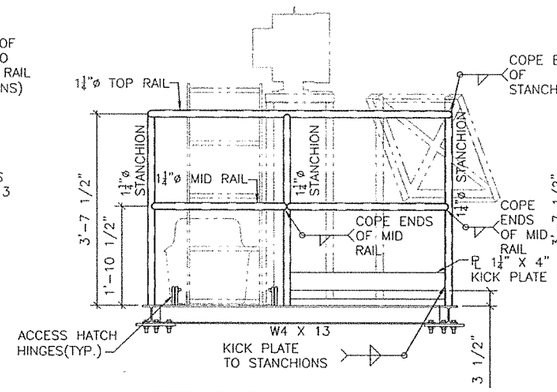

LEFT ELEVATION C-3

SCALE: 3/4"=1'-0"

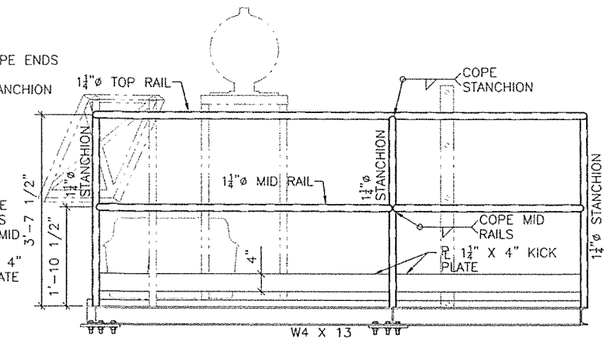

REAR ELEVATION C-4

SCALE: 3/4"=1'-0"

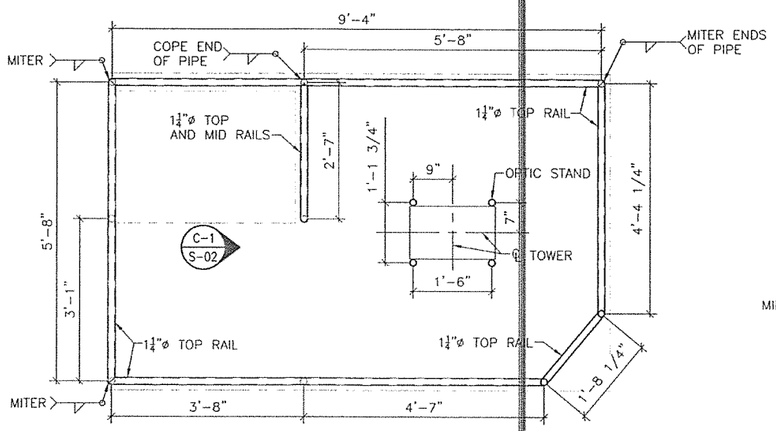

RAILING PLAN B-1

SCALE: 3/4"=1'-0"

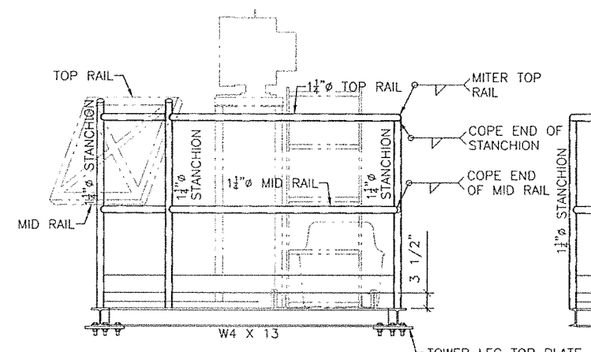

RIGHT ELEVATION B-3

SCALE: 3/4"=1'-0"

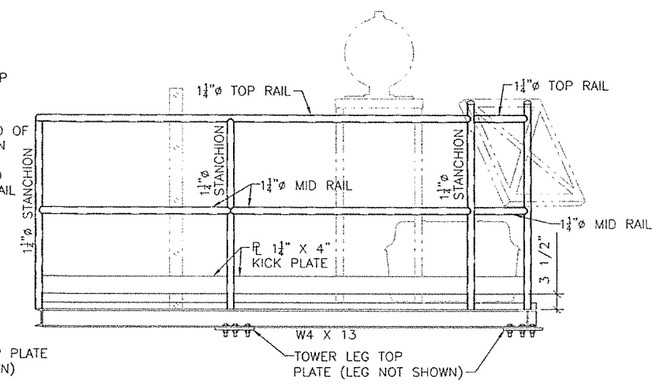

FRONT ELEVATION B-4

SCALE: 3/4"=1'-0"

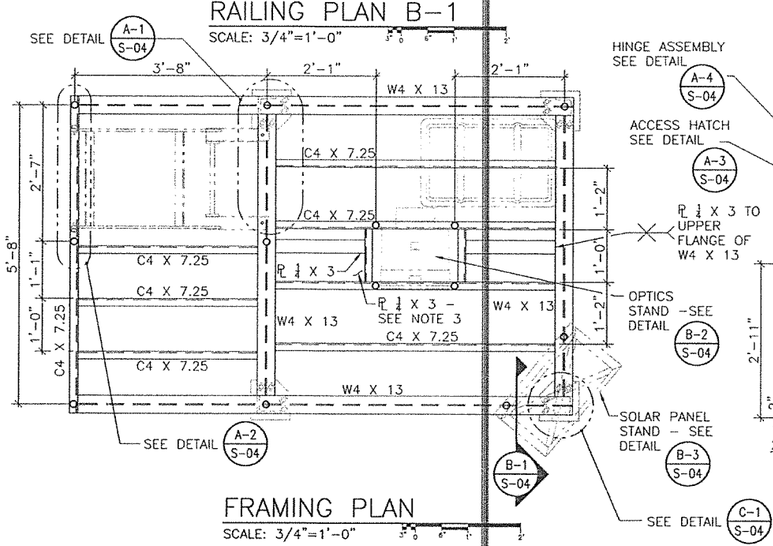

FRAMING PLAN

SCALE: 3/4"=1'-0"

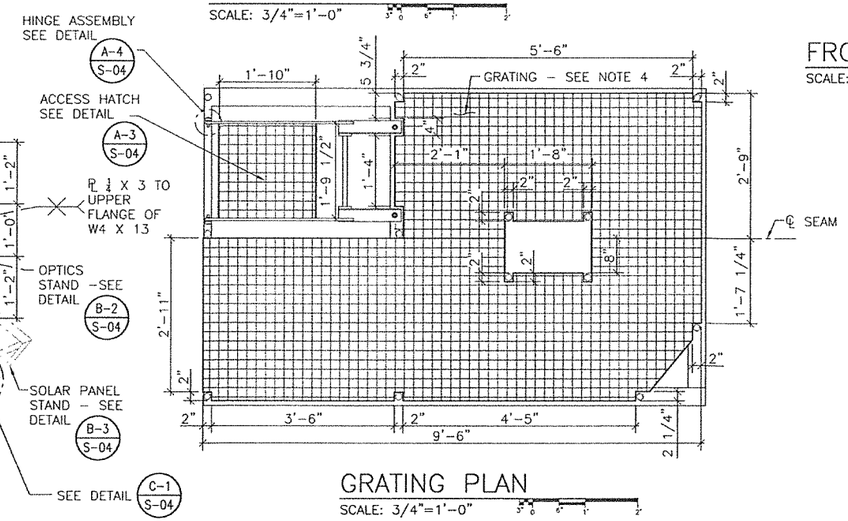

GRATING PLAN

SCALE: 3/4"=1'-0"

NOTES:

1. ALL STRUCTURAL MEMBER CONNECTIONS SHALL BE FULLY WELDED. ALL FRAMING WELDS SHALL BE ¼".
2. ALL PIPE SHALL BE SCHEDULE 40. ALL PIPE WELDS SHALL BE 3/16".
3. ALIGN PL ¼ X 3 CENTERED ABOVE SEAM OF GRATING. PL ¼ X 3 SHALL BE FLUSH WITH TOP OF PLATFORM FRAMING.
4. GRATING SHALL BE MOLDED FIBERGLASS, 1½" HIGH, 2" X 2" GRID WITH 70 PERCENT OPENINGS.

USCG CEU
CLEVELAND, OHIO
(216) 902-6200

CONSULTANTS

U. S. COAST GUARD
CIVIL ENGINEERING UNIT
CLEVELAND

USCG. CEU CLEVELAND
1240 EAST 9TH STREET
CLEVELAND, OH 44199-2060

ISSUE		
MARK	DATE	DESCRIPTION

A/E PROJECT NO:
CAD FILE NAME: C8505S02
DESIGNED BY: DGW
DRAWN BY: DGW
EDITED BY:
CHECKED BY:

SCALE: AS SHOWN PLOT SCALE:

SHEET TITLE

REBUILD KINKORA UPPER RR LT
CG ANT PHILADELPHIA
LEVITTOWN PA
LLNR 4150
CIVIL
PLATFORM PLAN/SEC./DET.

REVIEWED BY: D.G.WARD	REVIEWED BY: G. YRANKAR	REVIEWED BY: G.S. PLACZEK
PROJECT ENG.	BRANCH CHIEF	TECH. DIRECTOR
J.M. HALL, CDR.		15-OCT-18
APPROVING OFFICER		DATE

PROJECT NUMBER	DRAWING NUMBER
6784815	8505-D
DISCIPLINE/SHT NO	
S-02	SHEET 6 OF 10

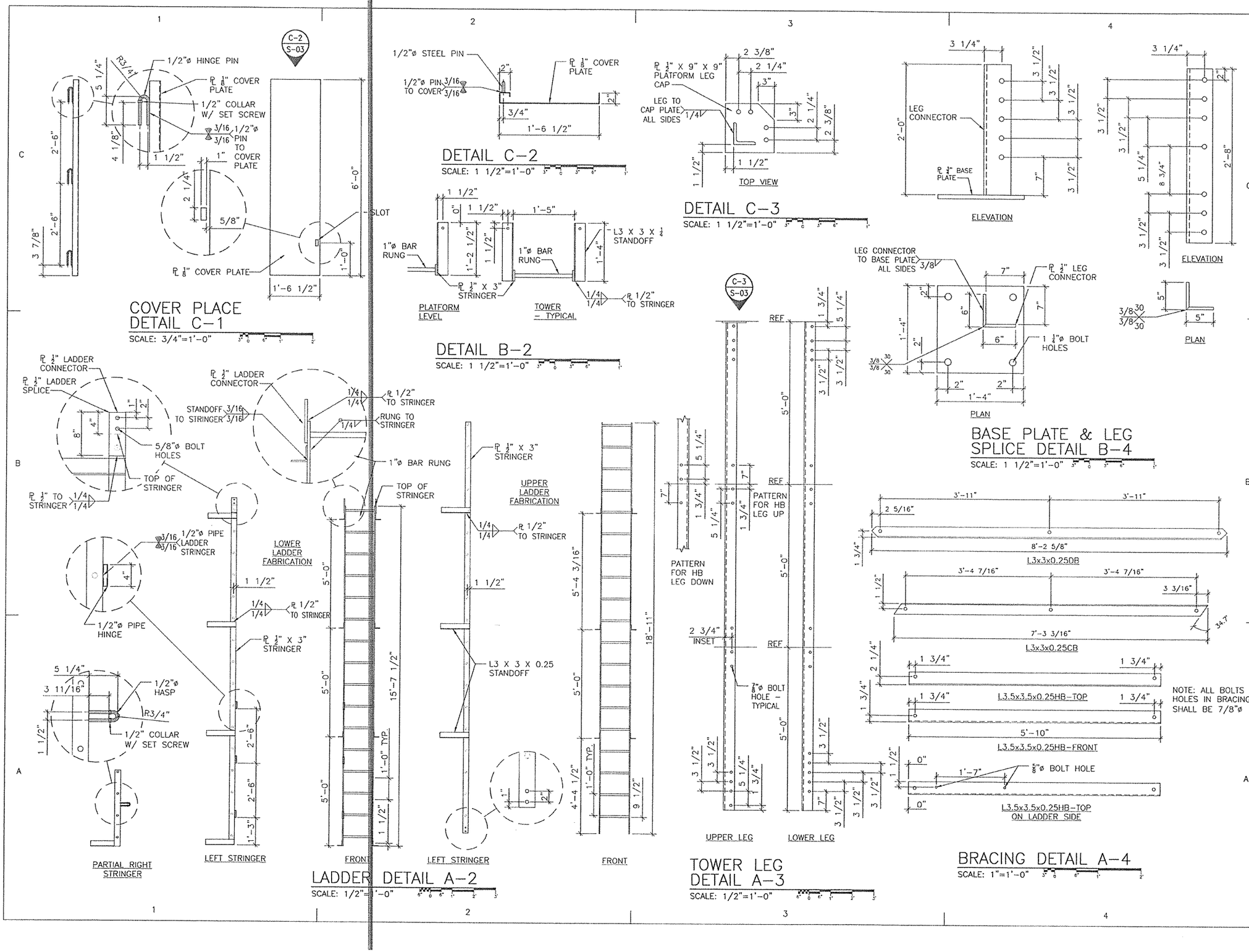

USCG CEU
CLEVELAND, OHIO
(216) 902-6200

CONSULTANTS

U. S. COAST GUARD
CIVIL ENGINEERING UNIT
CLEVELAND

USCG. CEU CLEVELAND
1240 EAST 9TH STREET
CLEVELAND, OH 44199-2060

ISSUE		
MARK	DATE	DESCRIPTION

A/E PROJECT NO:	
CAD FILE NAME:	C8505S03
DESIGNED BY:	DGW
DRAWN BY:	DGW
EDITED BY:	
CHECKED BY:	
SCALE: AS SHOWN	PLOT SCALE:

SHEET TITLE

REBUILD KINKORA UPPER RR LT
CG ANT PHILADELPHIA
LEVITTOWN PA
LLNR 4150
STRUCTURAL
TOWER DETAILS/SECTIONS

REVIEWED BY: D.G.WARD	REVIEWED BY: B. VRANKAR	REVIEWED BY: G.S. PLACZEK
PROJECT ENG.	BRANCH CHIEF	TECH. DIRECTOR

J.M. HALL, CDR. APPROVING OFFICER	15-OCT-18 DATE

PROJECT NUMBER	DRAWING NUMBER
6846157	8505-D
DISCIPLINE/SHT NO	SHEET 7 OF 10
S-03	

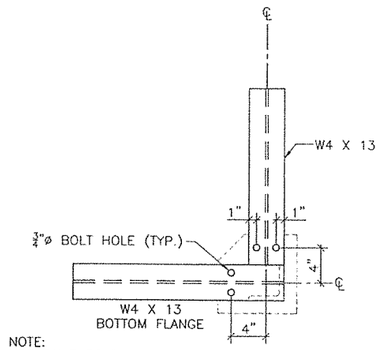

NOTE:
USE SAME BOLT PATTERN AT ALL LEG TOP PLATE LOCATIONS.

DETAIL C–1
SCALE: 1 1/2"=1'-0"

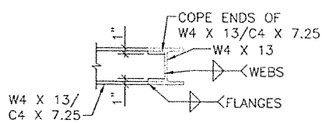

DETAIL B–1
SCALE: 1 1/2"=1'-0"

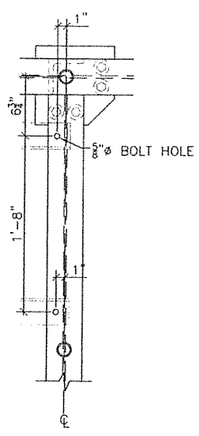

DETAIL A–1
SCALE: 1 1/2"=1'-0"

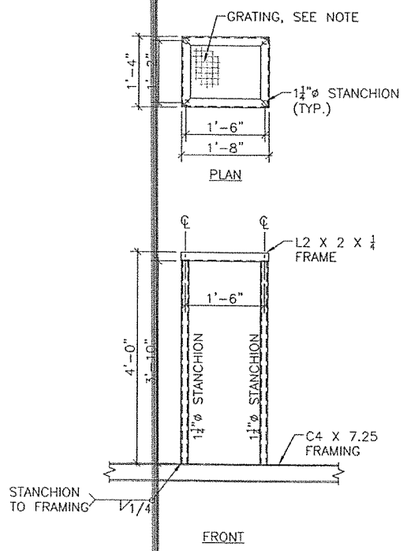

NOTE:
GRATING IN OPTICS STAND AND ACCESS HATCH SHALL BE 1" HIGH MOLDED FIBERGLASS WITH 1 1/4" X 1 1/2' OPENINGS. GRATING SHALL EXTEND TO INSIDE OF L2 X 2 X 1/4 FRAME. DRILL AND SECURE TO FRAME USING MANUFACTURER RECOMMENDED CLIPS AND FASTENERS SPACED AT 6" O.C. ALONG EDGE OF FRAME.

OPTICS STAND DETAIL B–2
SCALE: 3/4"=1'-0"

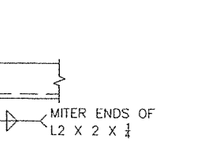

TYPICAL CORNER DETAIL
SCALE: 3" = 1'-0"

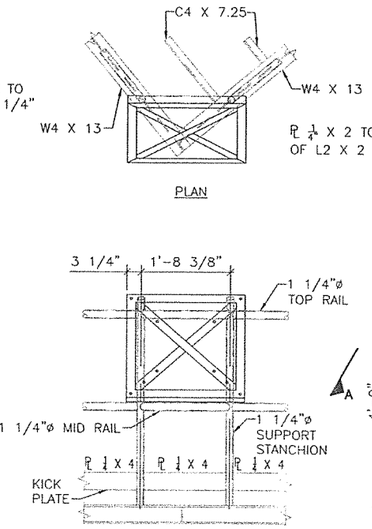

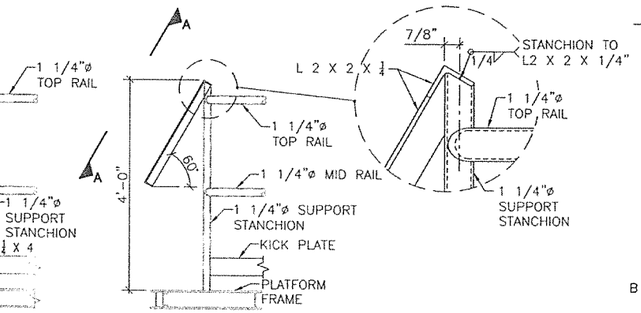

SOLAR PANEL STAND DETAIL B–3
SCALE: 3/4"=1'-0"

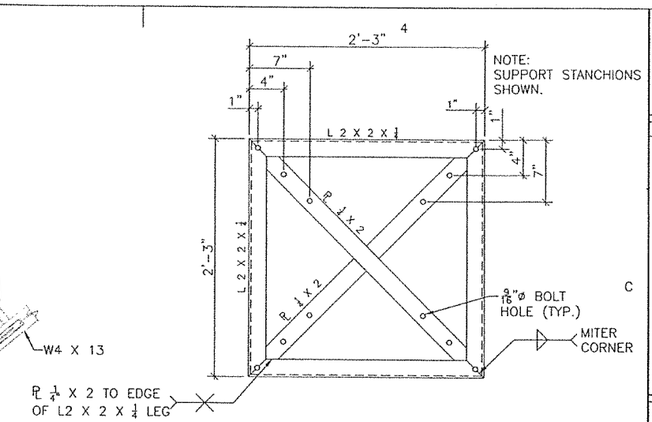

NOTE:
SUPPORT STANCHIONS SHOWN.

ORTHOGONAL VIEW A–A
SCALE: 1 1/2"=1'-0"

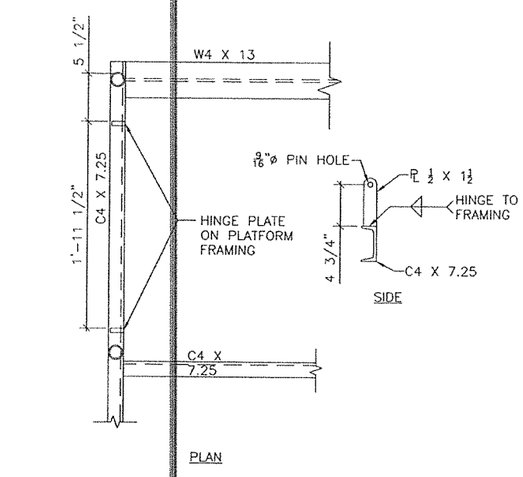

DETAIL A–2
SCALE: 1 1/2"=1'-0"

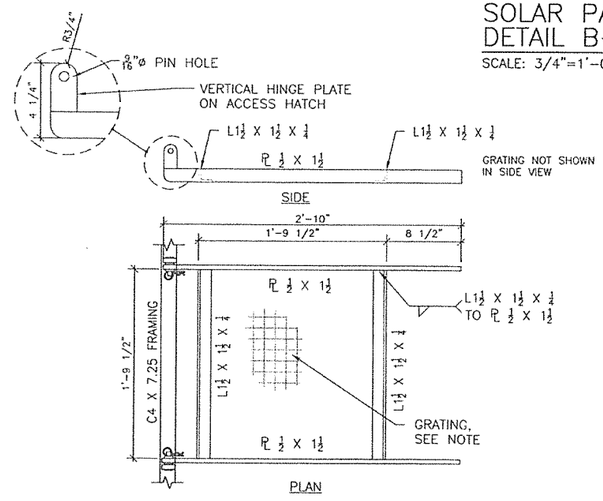

ACCESS HATCH DETAIL A–3
SCALE: 1 1/2"=1'-0"

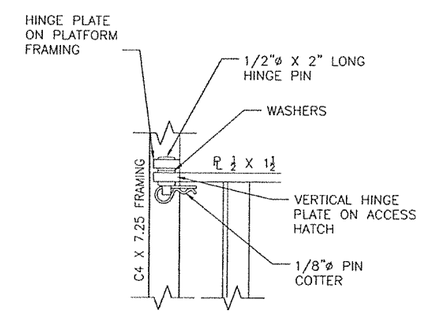

HINGE ASSEMBLY DETAIL A–4
SCALE: 3"=1'-0"

USCG CEU
CLEVELAND, OHIO
(216) 902-6200

CONSULTANTS

U. S. COAST GUARD
CIVIL ENGINEERING UNIT
CLEVELAND

USCG. CEU CLEVELAND
1240 EAST 9TH STREET
CLEVELAND, OH 44199-2060

ISSUE		
MARK	DATE	DESCRIPTION

A/E PROJECT NO:	
CAD FILE NAME:	C8505S04
DESIGNED BY:	DGW
DRAWN BY:	DGW
EDITED BY:	
CHECKED BY:	
SCALE: AS SHOWN	PLOT SCALE:

SHEET TITLE

REBUILD KINKORA UPPER RR LT
CG ANT PHILADELPHIA
LEVITTOWN PA
LLNR 4150
CIVIL
MISC. TOWER DETAILS

REVIEWED BY:	REVIEWED BY:	REVIEWED BY:
D.G.WARD	B. VRANKAR	G.S. PLAGZEK
PROJECT ENG.	BRANCH CHIEF	TECH. DIRECTOR
J.M. HALL, CDR.		15-OCT-18
APPROVING OFFICER		DATE

PROJECT NUMBER	DRAWING NUMBER
6784815	8505-D
DISCIPLINE/SHT NO	
S-04	SHEET 8 OF 10

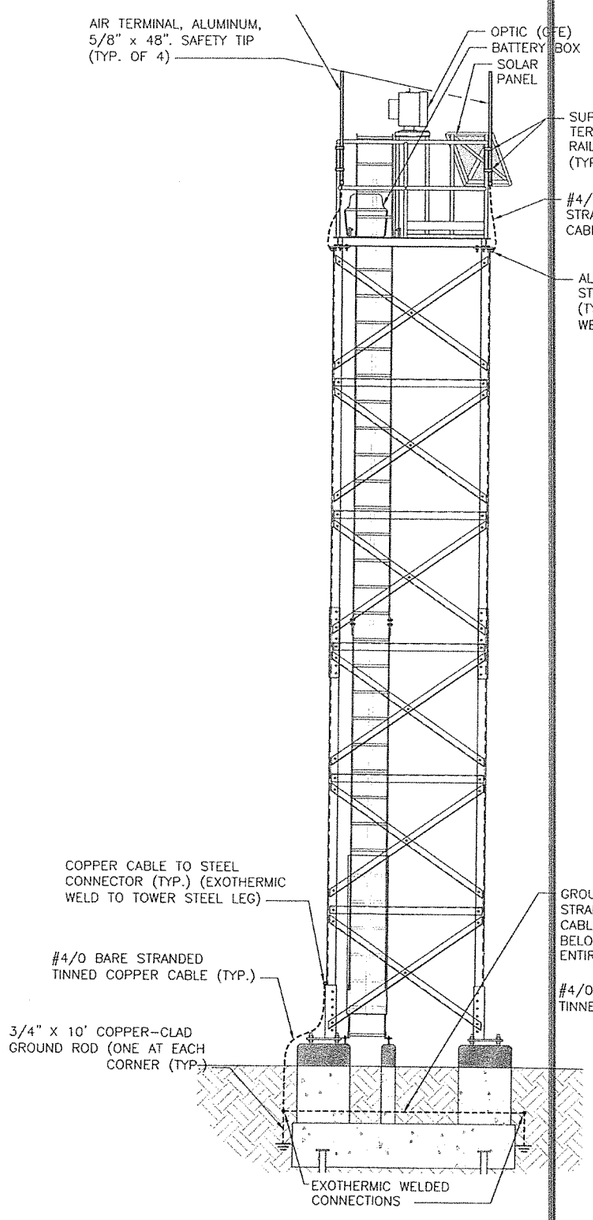

LEFT ELEVATION A–1

SCALE: 3/8"=1'-0"

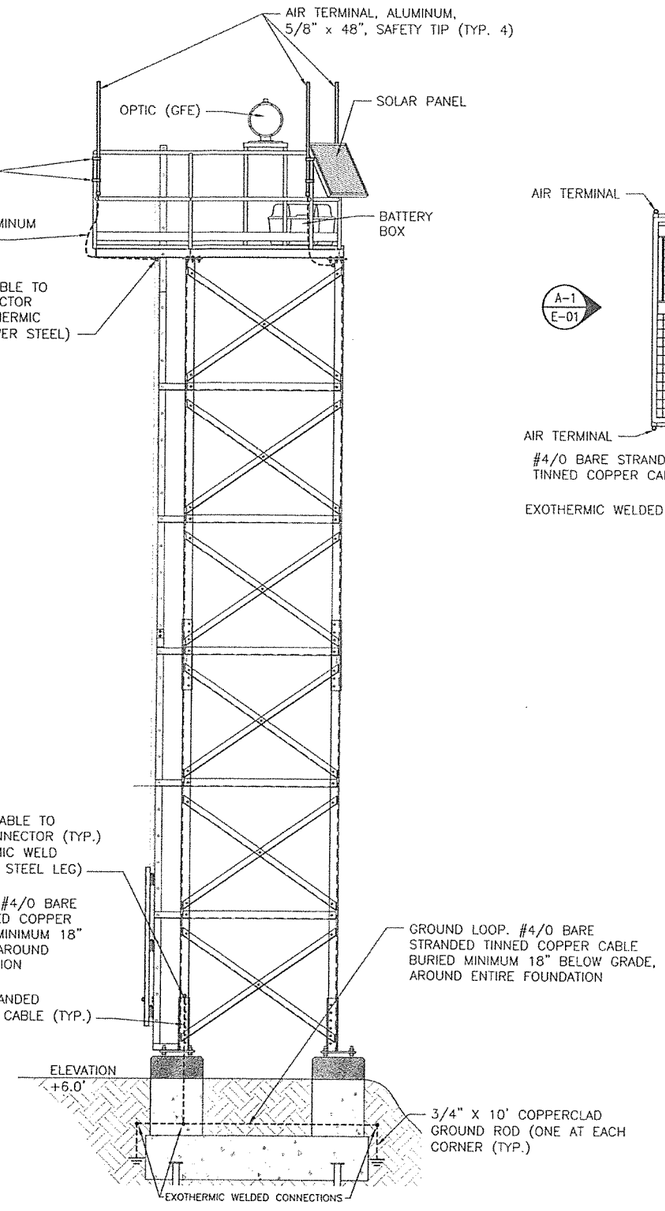

FRONT ELEVATION A–2

SCALE: 3/8"=1'-0"

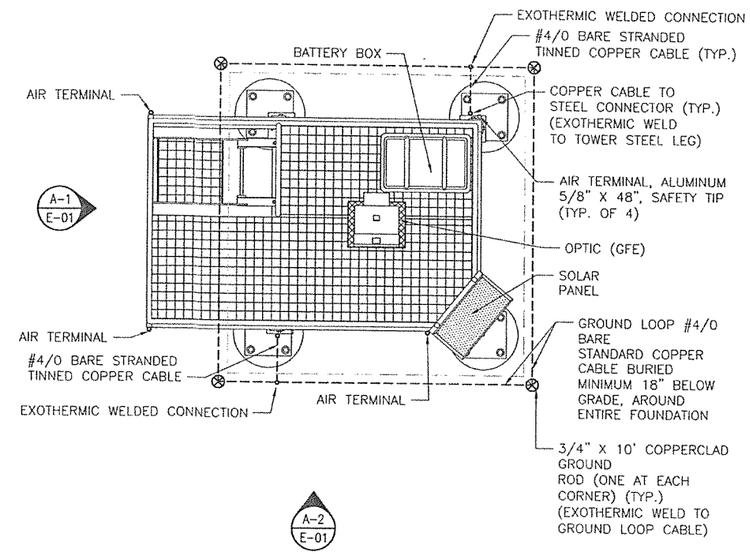

TOWER LAYOUT PLAN

SCALE: 1/2"=1'-0"

NOTES:

1. ALL ITEMS SHOWN ARE NEW UNLESS NOTED OTHERWISE.
2. ALL SIZES, LOCATIONS AND DIMENSIONS SHALL BE FIELD VERIFIED.
3. COORDINATE GOVERNMENT FURNISHED EQUIPMENT (GFE) WITH THE COR. ALL GOVERNMENT FURNISHED EQUIPMENT SHALL BE INSTALLED BY THE CONTRACTOR.
4. ALL LIGHTNING PROTECTION SYSTEMS AND COMPONENTS SHALL COMPLY WITH UL 96 AND NFPA 780. CLASS AS REQUIRED.
5. CONTRACTOR SHALL FIELD VERIFY ALL EXISTING UNDERGROUND UTILITIES PRIOR TO DIGGING ALL REQUIRED TRENCHES.

USCG CEU
CLEVELAND, OHIO
(216) 902-6200

CONSULTANTS

U. S. COAST GUARD
CIVIL ENGINEERING UNIT
CLEVELAND

USCG. CEU CLEVELAND
1240 EAST 9TH STREET
CLEVELAND, OH 44199-2060

ISSUE		
MARK	DATE	DESCRIPTION

A/E PROJECT NO:	
CAD FILE NAME:	C8505E01
DESIGNED BY:	PGB
DRAWN BY:	DGW/PGB/PJK
EDITED BY:	PGB
CHECKED BY:	PGB

SCALE: AS SHOWN PLOT SCALE:

SHEET TITLE

REBUILD KINKORA UPPER RR LT
CG ANT PHILADELPHIA
LEVITTOWN PA
LLNR 4150
ELECTRICAL
LIGHTNING PROTECTION PLAN

REVIEWED BY:	REVIEWED BY:	REVIEWED BY:
D.G. WARD	B. VRANKAR	G.S. PLAZTEK
PROJECT ENG.	BRANCH CHIEF	TECH. DIRECTOR

J.M. HALL, CDR.
APPROVING OFFICER

15-OCT-18
DATE

PROJECT NUMBER	DRAWING NUMBER
6784815	8505-D
DISCIPLINE/SHT NO	
E-01	SHEET 9 OF 10

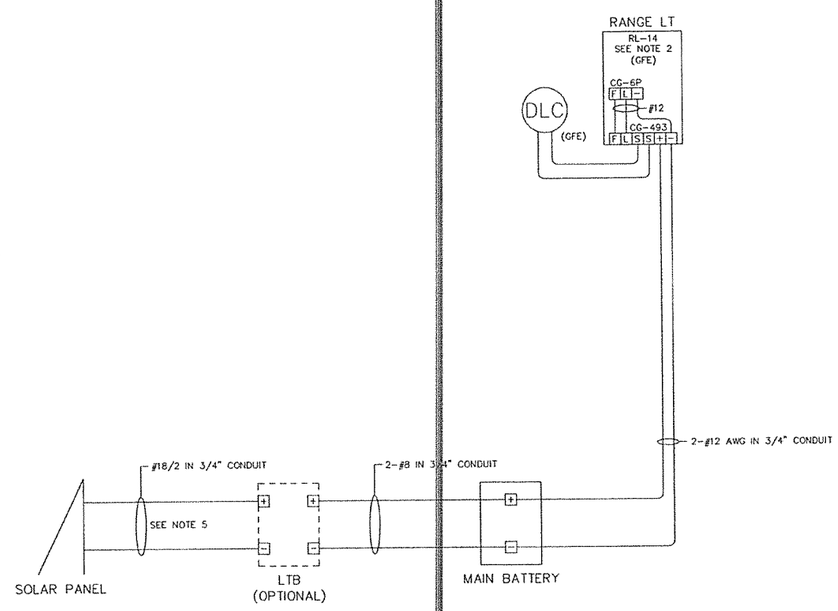

POINT TO POINT WIRE RUNNING LIST

FROM	WIRE SIZE (AWG)	MAX. DISTANCE (FT)	TO
SOLAR PANEL (+)	18	12	OPTIONAL LTB (+)
SOLAR PANEL (−)	18	12	OPTIONAL LTB (−)
OPTIONAL LTB (+)	8	12	MAIN BATTERY (+)
OPTIONAL LTB (−)	8	12	MAIN BATTERY (−)
MAIN BATTERY (+)	12*	15	RANGE LT, CG-493 (+)
MAIN BATTERY (−)	12*	15	RANGE LT, CG-493 (−)
RANGE LT, CG-493 (F)	12		RANGE LT, CG-6P (F)
RANGE LT, CG-493 (L)	12		RANGE LT, CG-6P (L)
RANGE LT, CG-493 (−)	12		RANGE LT, CG-6P (−)
PHOTORESISTOR, 1ST LEAD			RANGE LT, CG-493 (S)
PHOTORESISTOR 2ND, LEAD			RANGE LT, CG-493 (S)

* THE MAX. DISTANCE IS 26FT FOR #10 AWG; 39FT FOR #8 AWG.

BILL OF MATERIALS

ITEM	TYPE	SOURCE OF SUPPLY	QUANTITY
SOLAR PANEL (20W)	G-SEC OPL 401A	CONTRACTOR	(1) NOTE 4
PHOTORESISTOR	TYPE L	GFE	1
RANGE LT, RL-14	CARLISLE & FINCH	GFE	(1) NOTE 2
12VDC FLASHER	CG-493/CG-181	GFE	1
12VDC LAMPCHANGER	CG-6P	GFE	1
LAMPS	12VDC,4 HEAD LED	GFE	(1) NOTE 2
MAIN BATTERY, LEAD ACID 100AH	S2000	CONTRACTOR/DELCO	(1) NOTE 4

GFE – GOVERNMENT FURNISHED EQUIPMENT

NOTES:

1. ALL ITEMS SHOWN ARE NEW UNLESS NOTED OTHERWISE.
2. RANGE LANTERN, LAMPS, RHYTHM, AND BEAM WIDTH HAVE BEEN DETERMINED BY THE RANGE DESIGN PROGRAM. INSTALL NEW OPTIC RL-14, 0 DEG CLEAR LENS, ISO 6 G, 4 HEAD LED INSERT, 54,800 CD (DAY)/ 3.300 CD (NIGHT), CODE 0010. FOCAL HEIGHT IS 41 FT.
3. WIRE SIZES ARE BASED ON MAXIMUM ANTICIPATED LOADS. WIRES MAY BE RESIZED ONLY IF LOAD AND CHARGING CIRCUIT VOLTAGE DROPS DO NOT EXCEED 0.35V & 0.75V RESPECTIVELY.
4. BATTERY SIZE AND NUMBER OF SOLAR PANELS HAVE BEEN DETERMINED BY THE SOLAR DESIGN PROGRAM OR SOLAR SIZING TABLES IN ATON TECH MANUAL, M1650003A. PROVIDE A WEATHERPROOF BATTERY ENCLOSURE.
5. STANDARD SOLAR PANELS COME WITH A 12FT LEAD, #18AWG PIGTAIL. IF THERE IS NO LTB AND THE SOLAR PANEL IS CLOSE TO THE BATTERY, CONNECT THE PIGTAIL DIRECTLY TO THE BATTERY.
6. ALL WIRING RUNS SHALL BE ENCLOSED IN APPROPRIATELY SIZED (MINIMUM 3/4") RIGID PVC SCHEDULE 80 CONDUIT OR LIQUID TIGHT FLEX CONDUIT, OR AS INDICATED, TO FORM A WEATHER TIGHT SYSTEM AND TO PROTECT ELECTRICAL COMPONENTS FROM THE ELEMENTS.
7. CONTRACTOR TO COORDINATE ALL REQUIRED ELECTRICAL EQUIPMENT AND GOVERNMENT FURNISHED EQUIPMENT (GFE) WITH THE COR.
8. ALL GOVERNMENT FURNISHED EQUIPMENT (GFE) SHALL BE INSTALLED BY THE CONTRACTOR.

USCG CEU
CLEVELAND, OHIO
(216) 902-6200

CONSULTANTS

U. S. COAST GUARD
CIVIL ENGINEERING UNIT
CLEVELAND

USCG. CEU CLEVELAND
1240 EAST 9TH STREET
CLEVELAND, OH 44199-2060

ISSUE

MARK	DATE	DESCRIPTION

A/E PROJECT NO:	
CAD FILE NAME:	C8505E02
DESIGNED BY:	PGB
DRAWN BY:	PJK/PGB
EDITED BY:	PGB
CHECKED BY:	PGB
SCALE: AS SHOWN	PLOT SCALE:

SHEET TITLE

REBUILD KINKORA UPPER RR LT
CG ANT PHILADELPHIA
LEVITTOWN PA
LLNR 4150
ELECTRICAL
ELECTRICAL SCHEMATIC

REVIEWED BY: D.G. WARD	REVIEWED BY: B. VRANKAR	REVIEWED BY: G.S. PLASZEK
PROJECT ENG.	BRANCH CHIEF	TECH. DIRECTOR

JM. HALL, CDR. (APPROVING OFFICER)	15-OCT-18 (DATE)

PROJECT NUMBER	DRAWING NUMBER
6784815	8505-D
DISCIPLINE/SHT NO	
E-02	SHEET 10 OF 10